DIRECTIVE CORNER ANTENNA 320/470 MHz

T-DC320/470.13

MATERIAL	
Boom	Aluminiun alloy EN AW-6082
Elements	Aluminiun alloy EN AW-6060
Screws and nuts	Stainless steel
Treatment	Surtec650 (in specification RoHS)

TECHNICAL SPECIFICATIONS	
Impedance (Ohms)	50
Frequency range	320 ÷ 470 MHz
V.S.W.R	Less than 2.0
Polarization	Vertical or Orizontal
Connector	N-female
Mounting	On masts from 60 to 115 mm diam.
Gain (dBi)	13
Max power (W)	150
Wind resistance	160 Km/h
Temperature (°C)	-40° - +85°
Dimensions (mm)	1200 x 1000 x 700
Net weight (g)	9500 ± 1000

DEVICE EQUIPPED WITH A DC GROUNDED SYSTEM AND CONDENSING HOLE

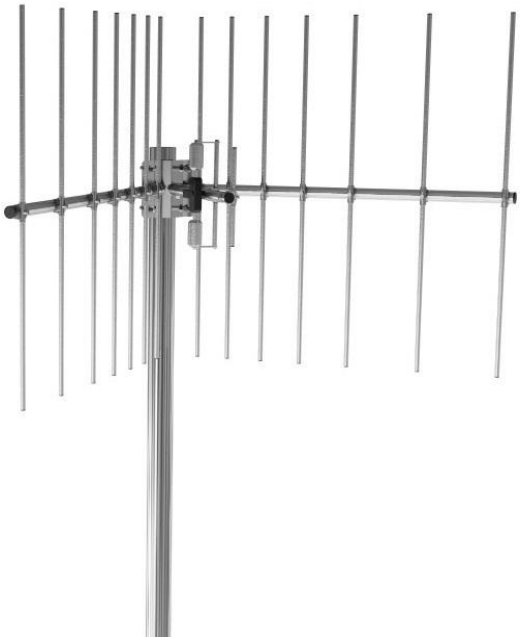

V.S.W.R.

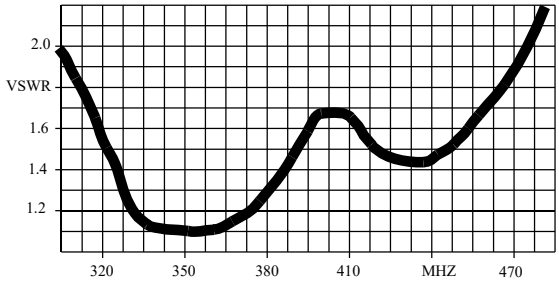

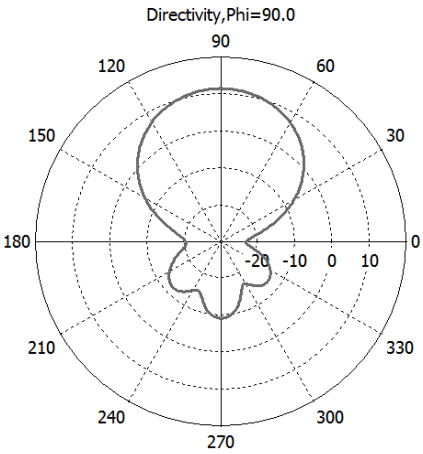

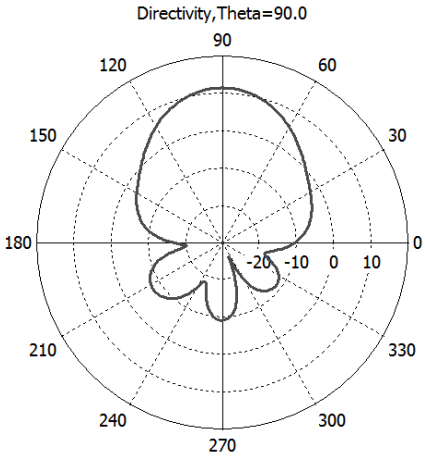

Atel-Antennas S.r.l.

Viale Caduti sul Lavoro, 21/A - 15061 Arquata Scrivia (AL) - Italy

Tel. +39 0143 635496 - Fax +39 0143 666423 - Website: www.atel-antennas.eu - Mail: commerciale@atel-antennas.eu - P.IVA 02442250060

Fix the bracket to the pale

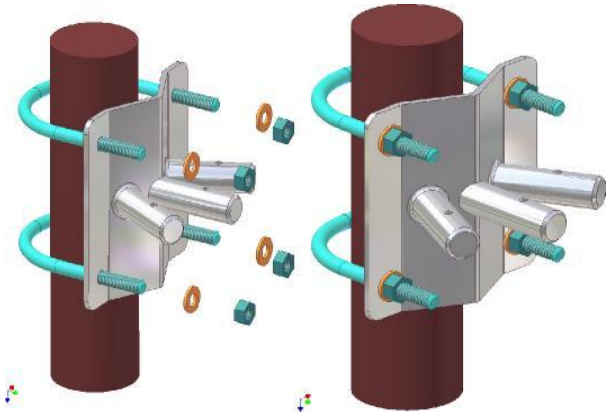

Put the O-RING in the bracket

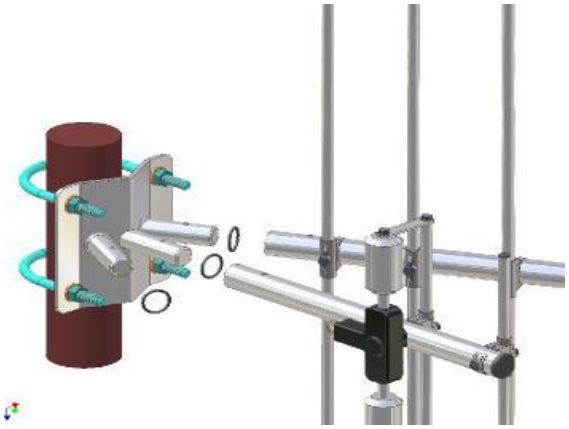

Introduce the antennas

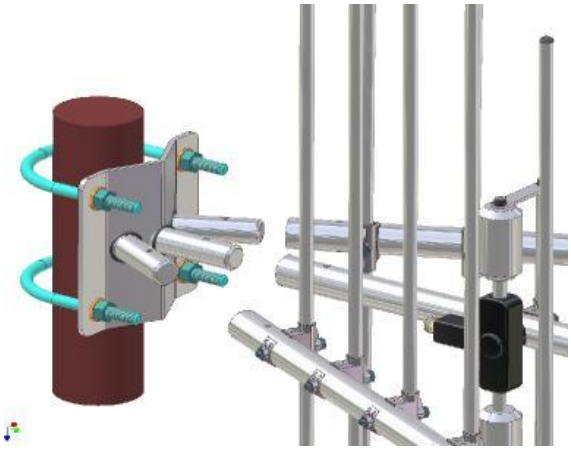

Lock the antennas

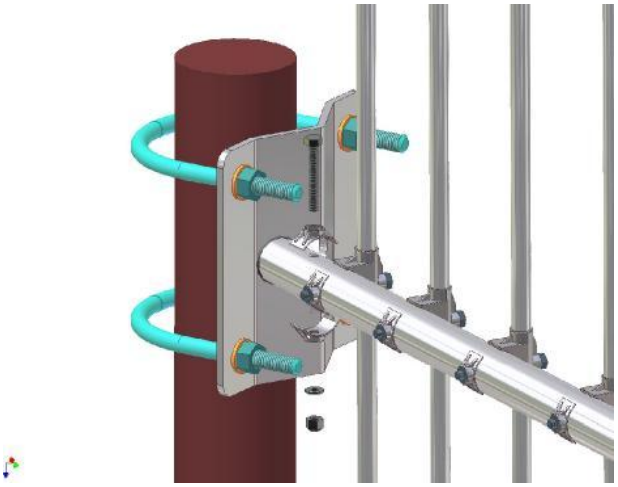

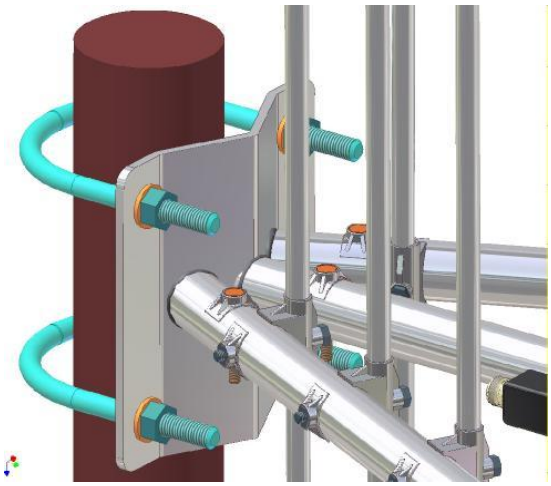

Screw the dowels

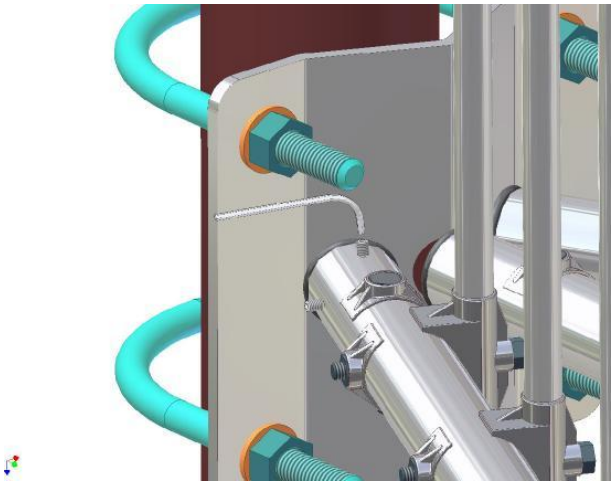

Atel-Antennas S.r.l.
Viale Caduti sul Lavoro, 21/A - 15061 Arquata Scrivia (AL) - Italy
Tel. +39 0143 635496 - Fax +39 0143 666423 - Website: www.atel-antennas.eu - Mail: commerciale@atel-antennas.eu - P. IVA 02442250060